PART No	DIM 'A'
9911/0250	250
9911/0340	340
9911/0550	550
9911/0720	720

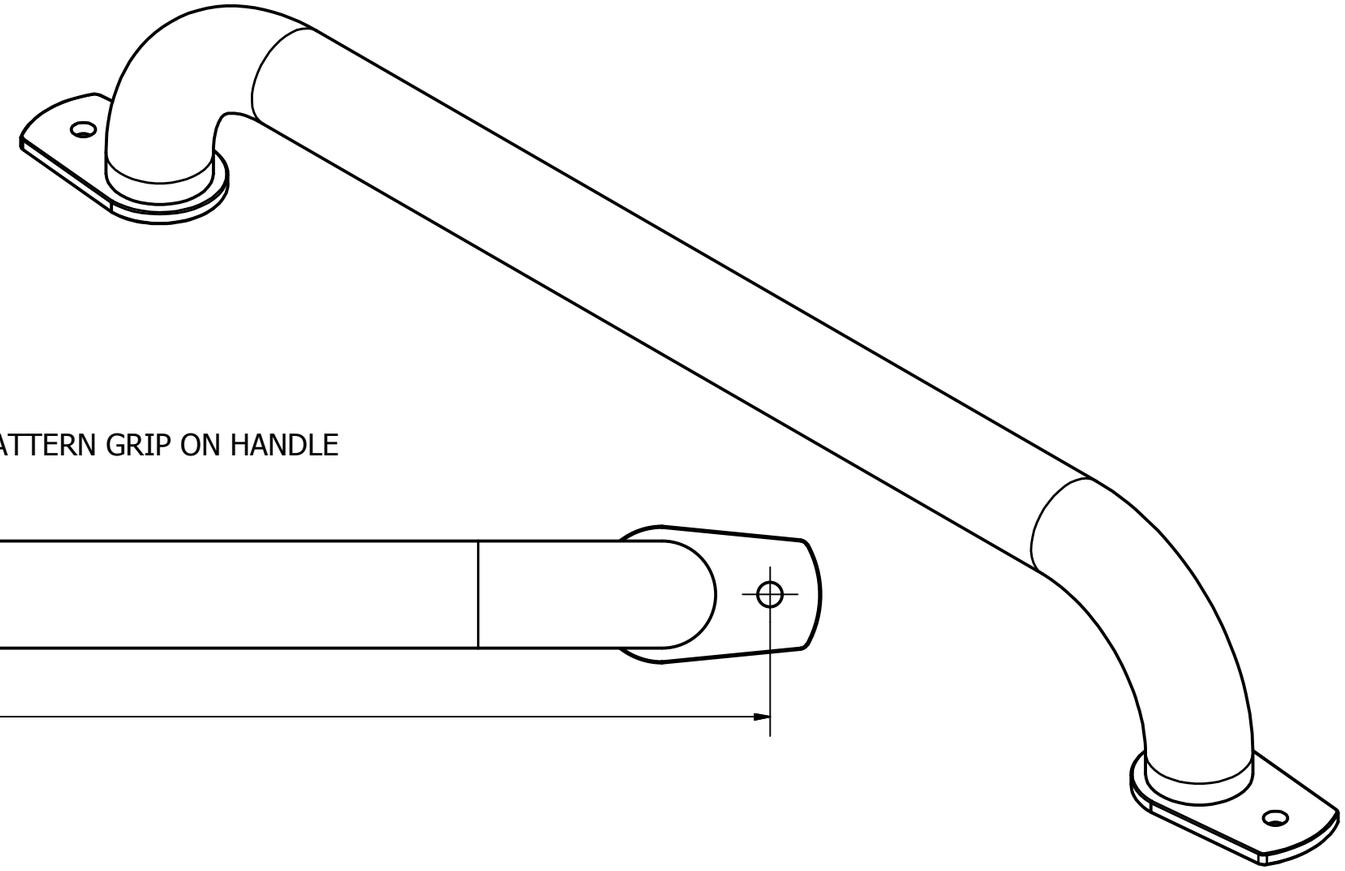

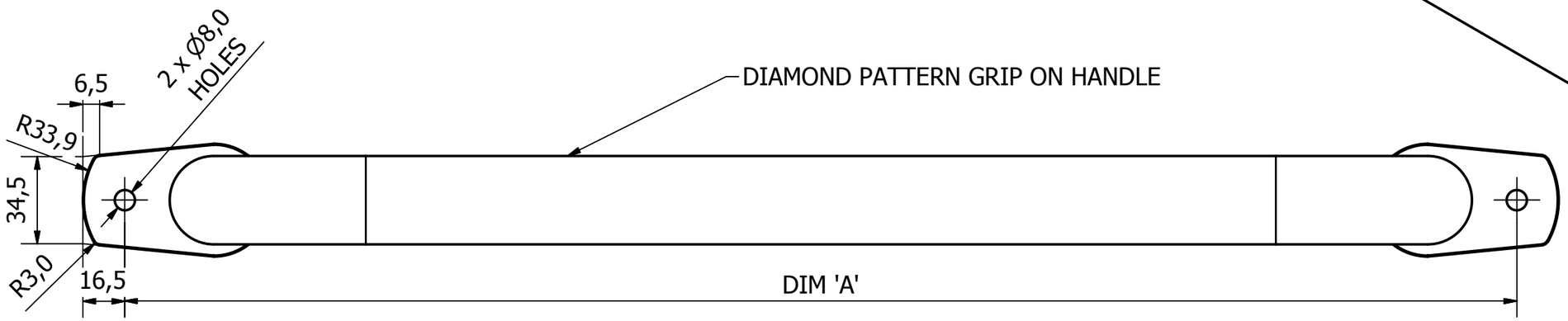

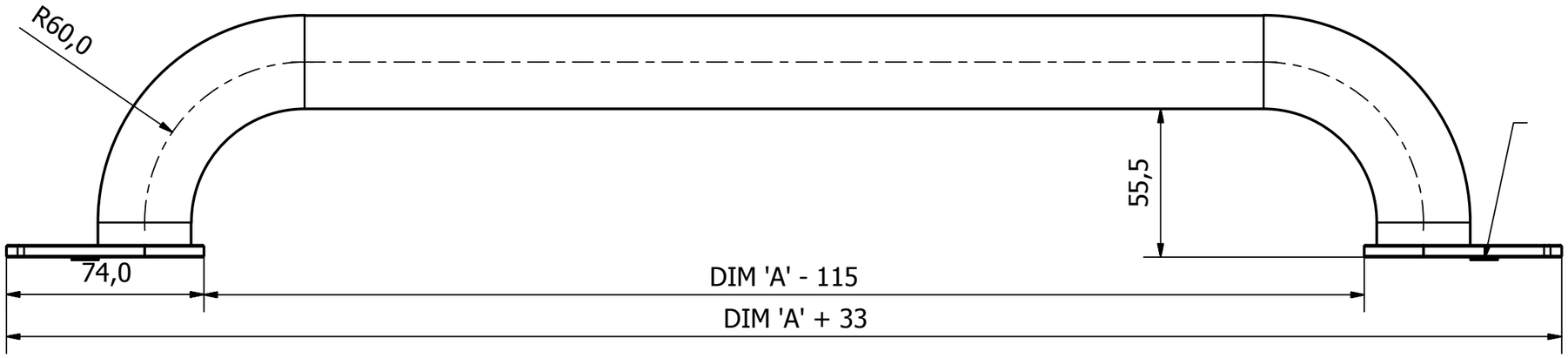

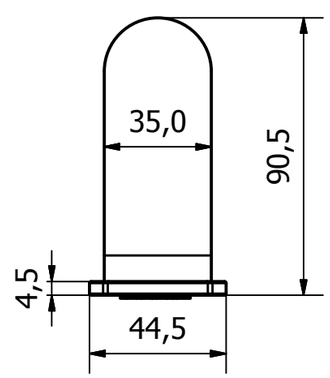

NOTE:

FINISH - POWDER COAT YELLOW RAL 1023

REV	DESCRIPTION	DATE	APPROVED
2	PART NUMBER ASSIGNED. STAMPED FEATURE ADDED	09/03/2017	U.F
1	VALIDATION COMPLETE	26/01/2017	A.P

GENERAL TOLERANCES ON LENGTHS

0.5 - 6 ± 0.1mm
6 - 30 ± 0.2mm
30 - 120 ± 0.3mm
120 - 400 ± 0.5mm
400 - 1000 ± 0.8mm
1000 - 1200 ± 1.2mm
2000 - 4000 ± 2.0mm

DRAWN BY	CHECKED BY	THIRD ANGLE PROJECTION	SCALE	MATERIAL	MASS	FINISH	Date	ALL DIMS IN MM UNLESS STATED DO NOT SCALE	A3
U.F	A.P		1 : 2	Steel	1.483 kg	SEE NOTE	26/01/2017		

TRANSQUIP
Vehicle Equipment Distribution

YELLOW STEEL GRAB HANDLE - XXX CRS

TQ-VGH-550

Edition 2

Sheet 1 / 1