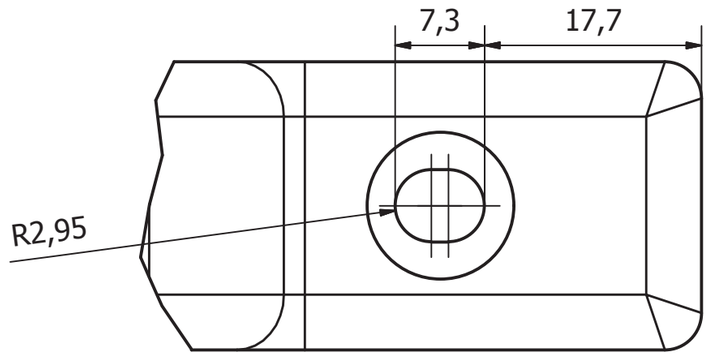

DETAIL A
(2 : 1)
2 PLACES

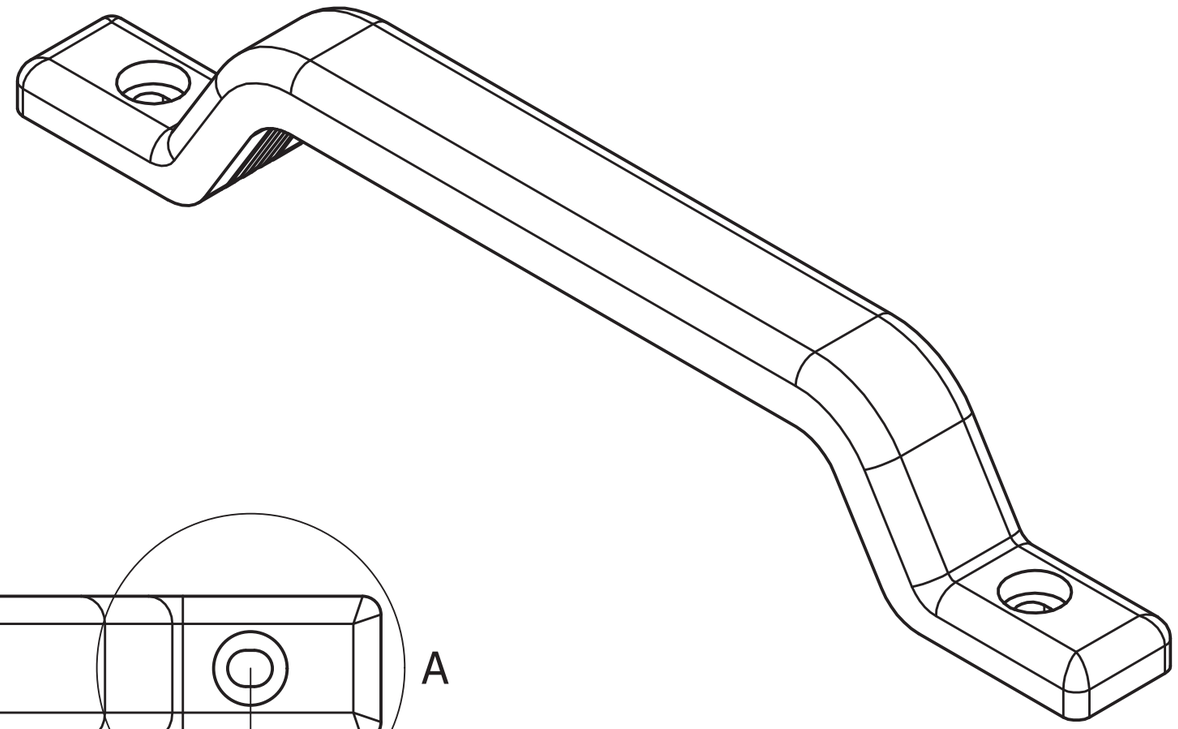

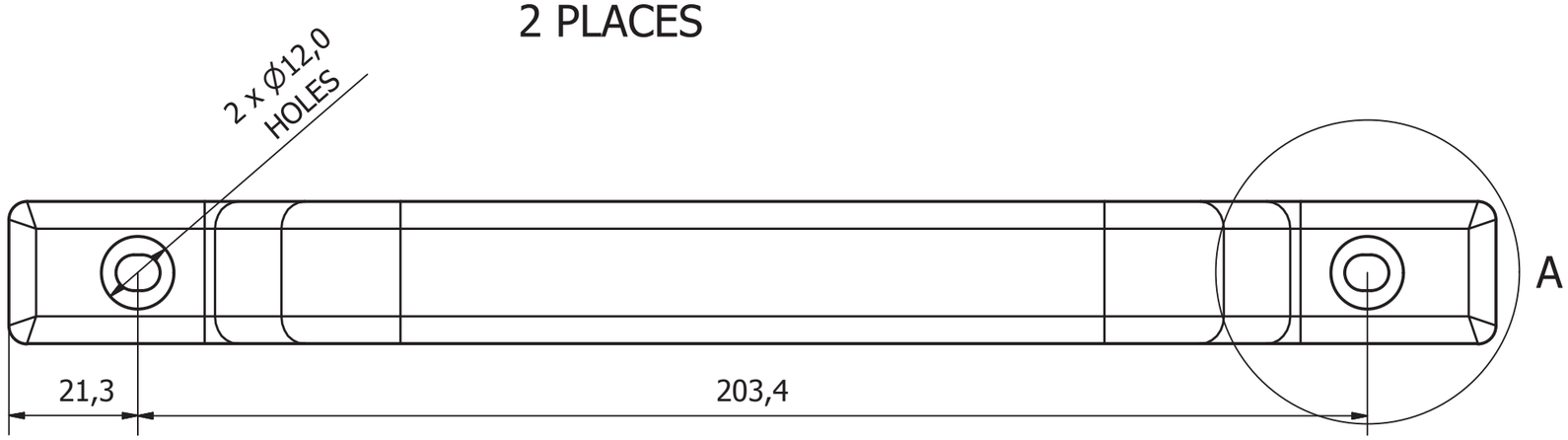

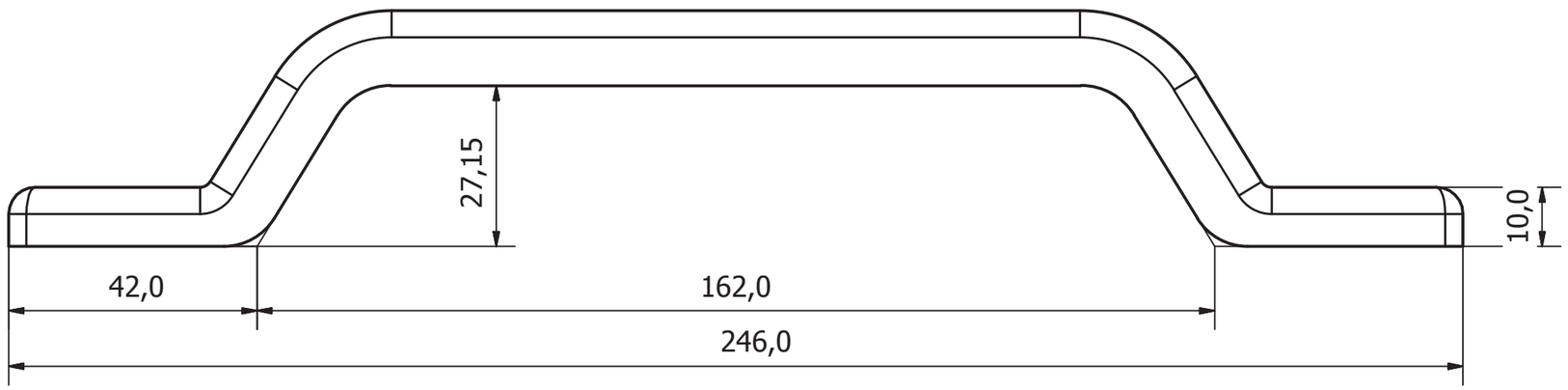

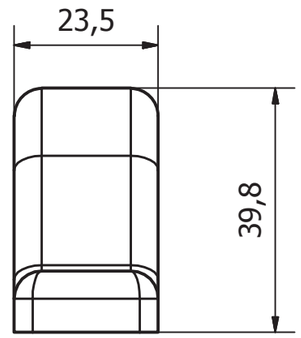

REV	DESCRIPTION	DATE	APPROVED
1	VALIDATION COMPLETE	16/02/17	A.P

GENERAL TOLERANCES ON LENGTHS

0.5 - 6 ± 0.1mm
6 - 30 ± 0.2mm
30 - 120 ± 0.3mm
120 - 400 ± 0.5mm
400 - 1000 ± 0.8mm
1000 - 1200 ± 1.2mm
2000 - 4000 ± 2.0mm

DRAWN BY	CHECKED BY		SCALE	MATERIAL	MASS	FINISH	Date	ALL DIMS IN MM UNLESS STATED DO NOT SCALE	A3
U.F	A.P	THIRD ANGLE PROJECTION	1:1	PC/ABS Plastic	0.025 kg	Black	01/02/2017		

RIGID PLASTIC PULL HANDLE - 246 O/A

0790-001	Edition 1	Sheet 1 / 1